VTA's BART Silicon Valley Phase II Extension Project

Board of Directors Special Meeting

April 17, 2020

Santa Clara Valley Transportation Authority

Solutions that move you

Background

- VTA and BART Board of Directors approved the BART Silicon Valley Phase II Project (through certification/acceptance of the SEIR) for a single-bore tunnel stacked platform station configuration with an agreement that VTA would explore side-by-side track arrangements

- VTA received Federal environmental clearance (Record of Decision) on the single- bore stacked platform station configuration

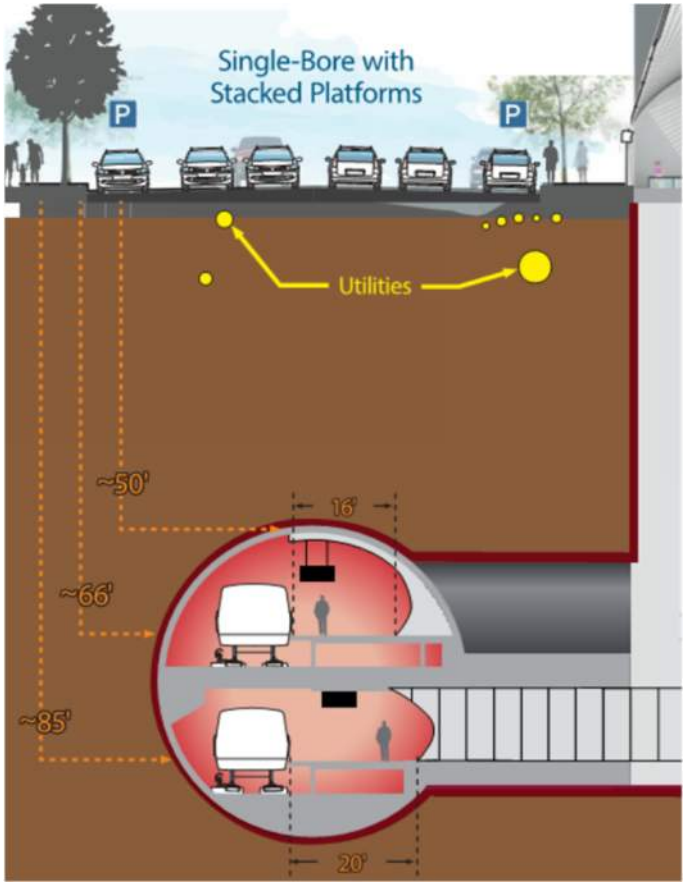

Approximately 48' TBM

Background

- Concurrent to pursuing Federal funding, VTA and BART explored a larger single-bore tunnel with side-by-side tracks and center platform

- Engineering on the larger single bore with center platform was advanced to 10% design and showed higher projected costs and risks, thus eliminated from further consideration

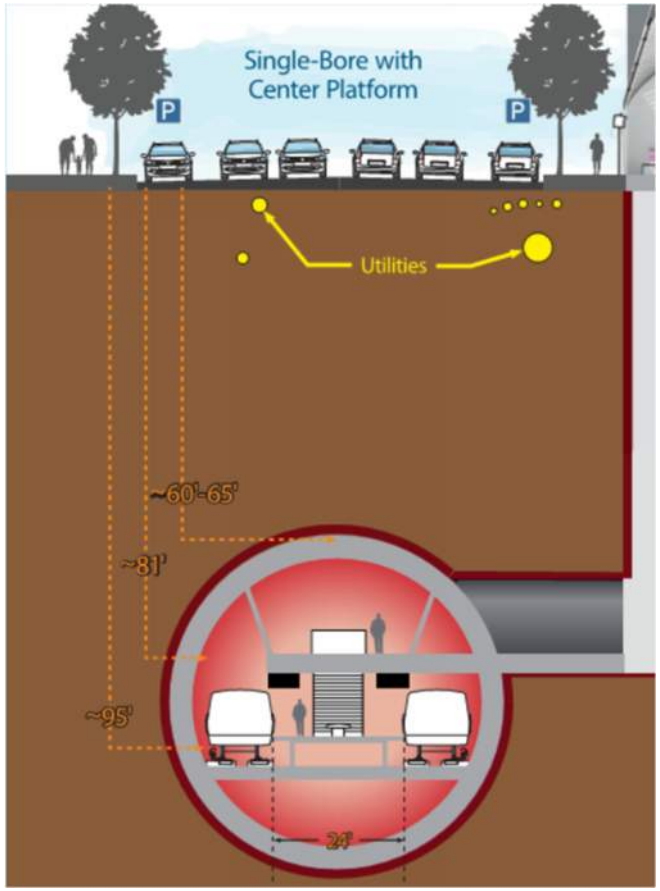

Approximately 56' TBM

BART's Operational Concerns for Stacked Configuration

- **Emergency Egress**
  Enclosed stairwells in the tunnel sections as a means for emergency evacuation is not considered intuitive for passengers

- **Operations**
  Challenges with train operations due to ramps/transitions and associated emergency egress

- **Ventilation**
  Proposed designs differ compared to the rest of the BART underground system requiring training of employees for unique operational scenarios

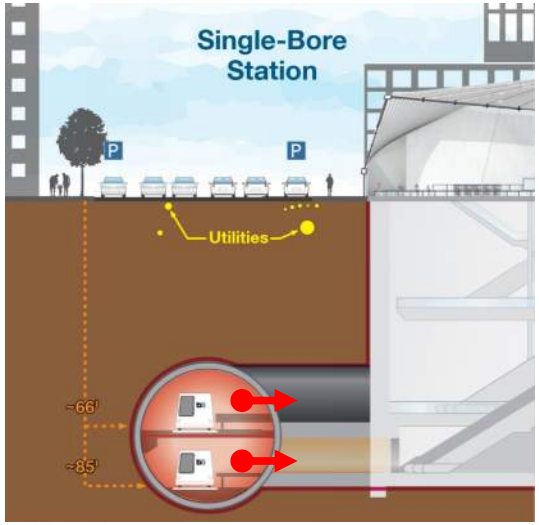

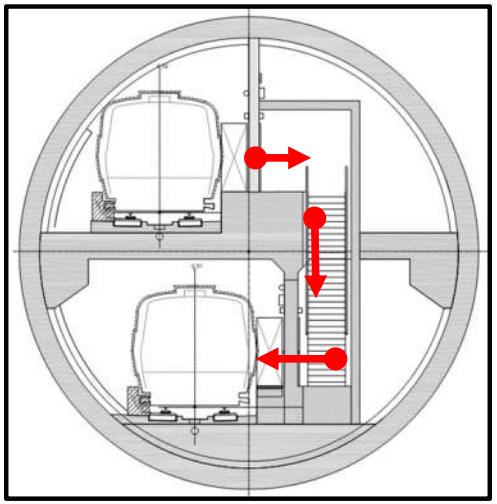

Project Alignment

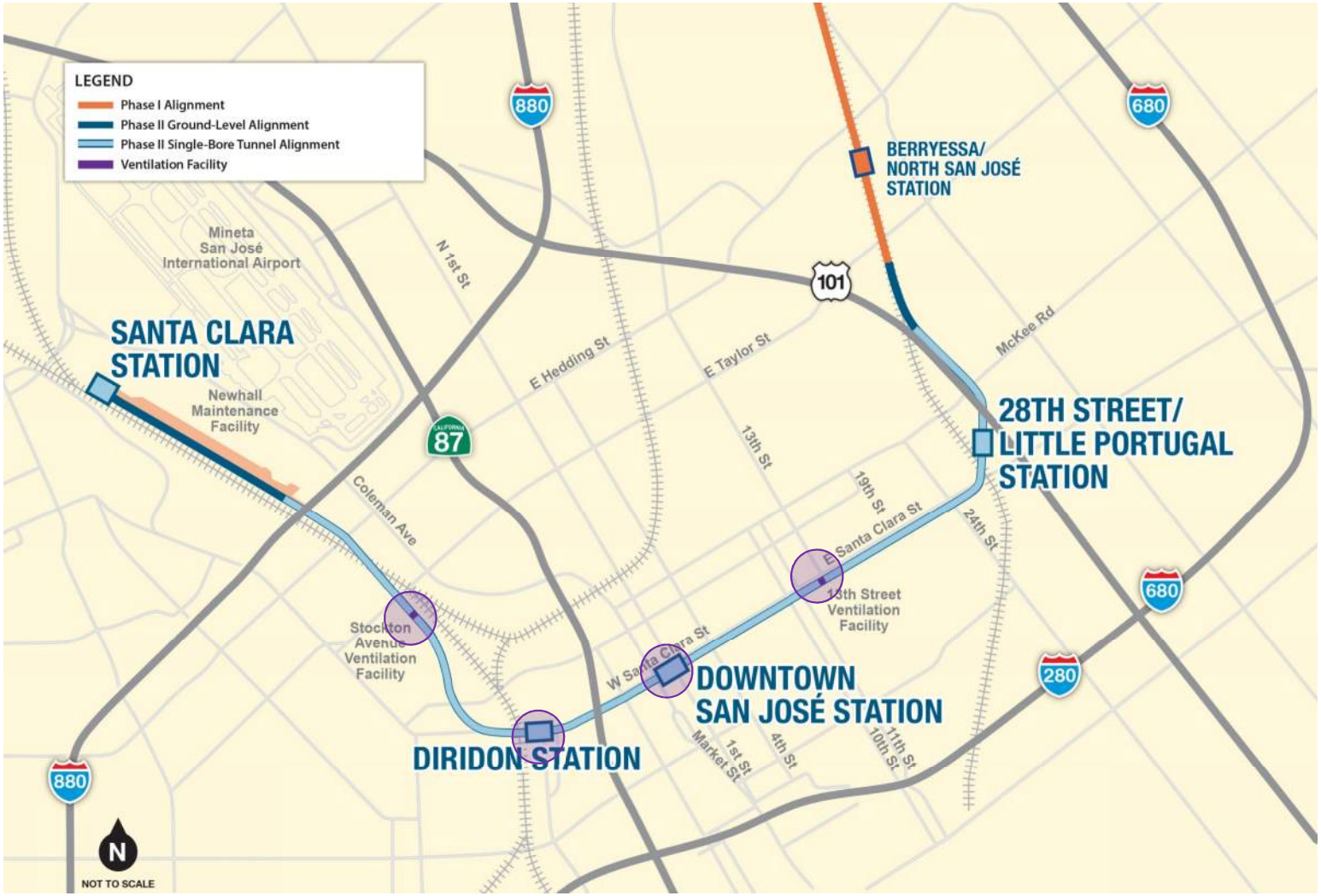

Ventilation/Emergency Egress Facility Sites

Concept to utilize 13th Street and Stockton Avenue facilities to optimize ventilation, emergency evacuation and operational flexibility

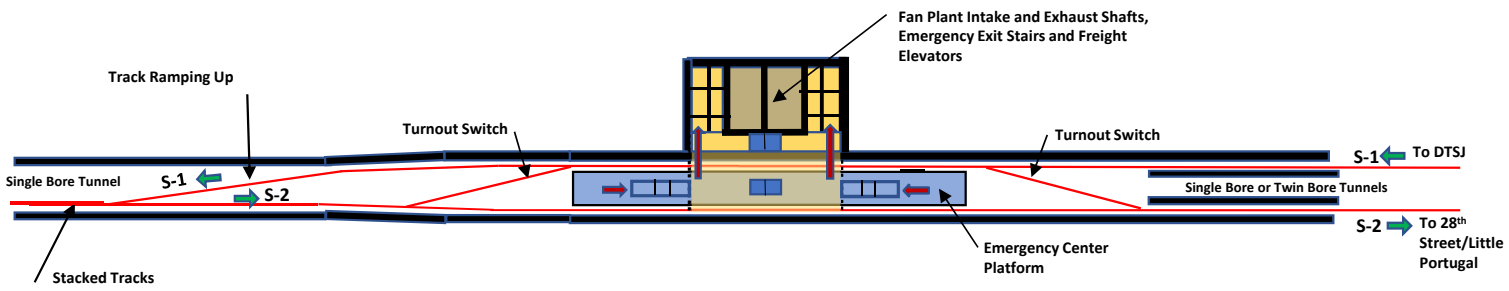

Diagrammatic Layout

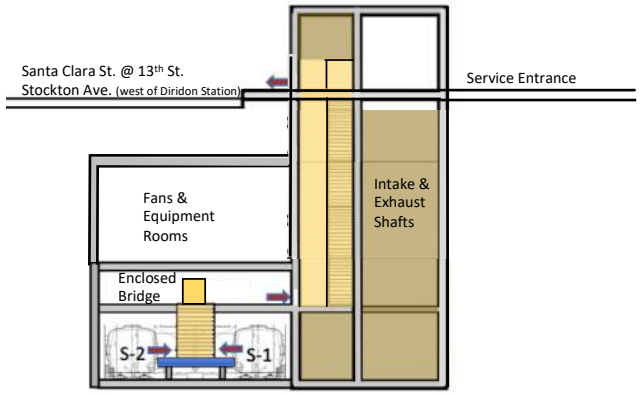

Cross Section

Typical Section for 13th Street and Stockton Avenue Sites

Engineering design is required for both these facilities to address length of approaches, track configuration, additional ROW requirements, potential utility impacts, potential interface between TBMs, etc.

Ventilation/Emergency Egress Facility Sites

13th Street Site

Stockton Avenue Site

Legend

Sites identified in SEIS/SEIR

Potential limits of cut & cover on Santa Clara Street & Stockton Avenue

Final location and **cut & cover footprint TBD*

Optimized Single Bore Stacked Concept #1

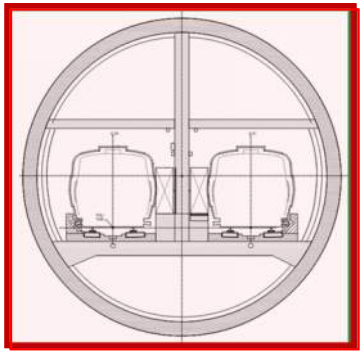

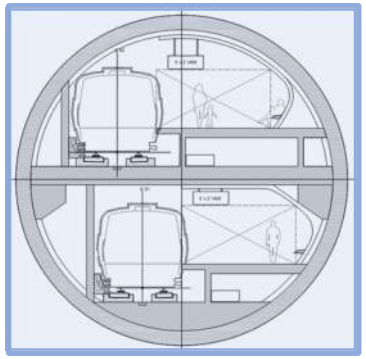

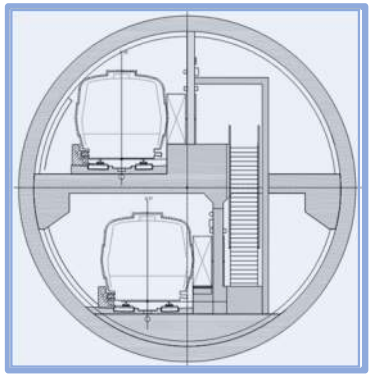

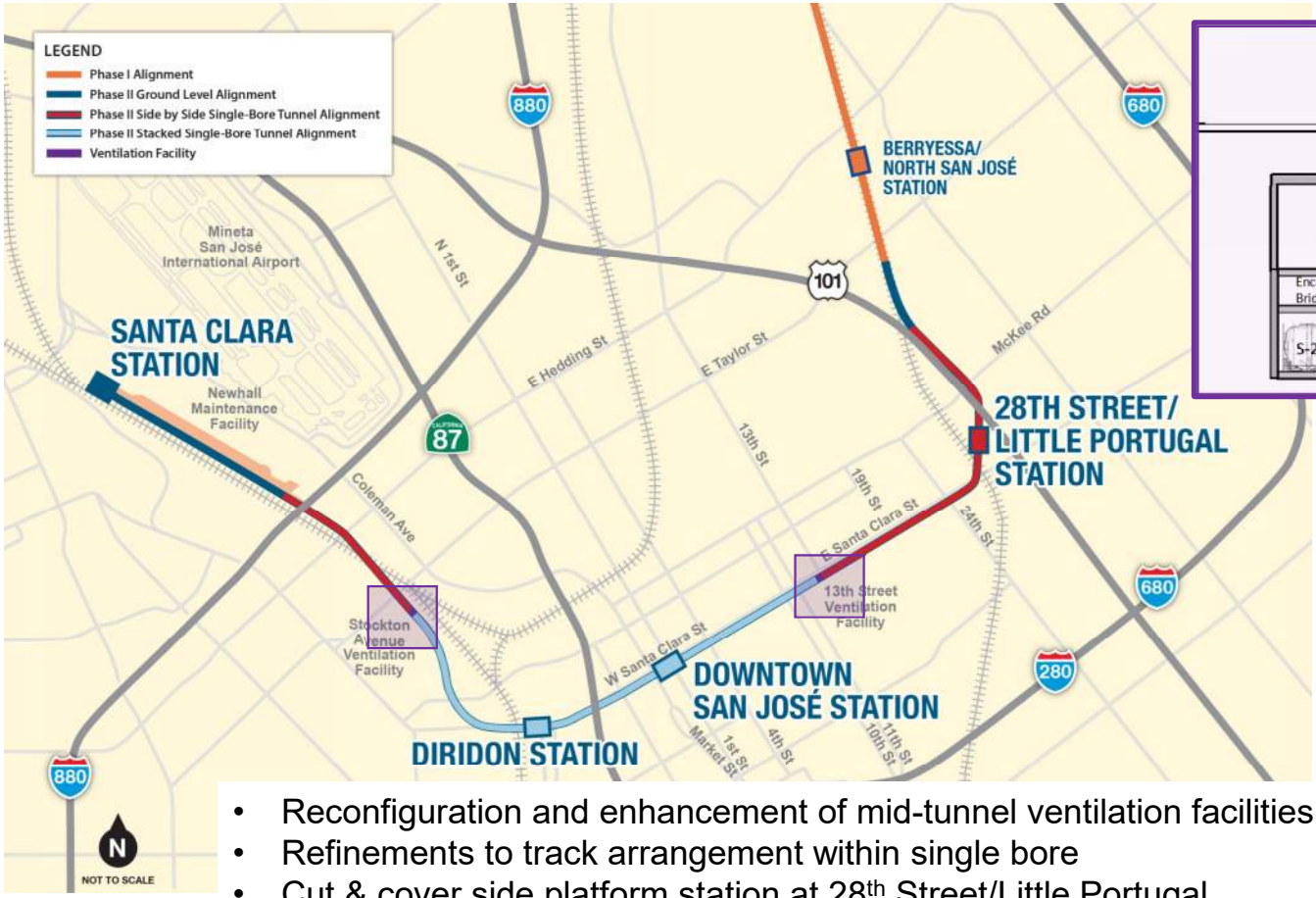

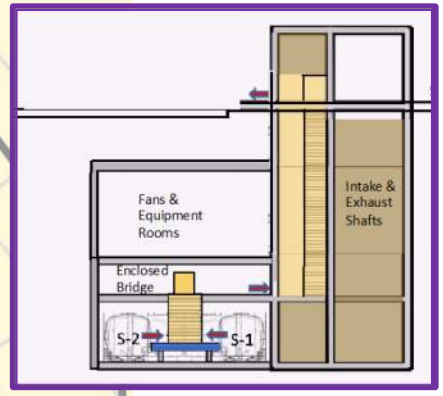

- Reconfiguration and enhancement of mid-tunnel ventilation facilities
- Refinements to track arrangement within single bore
- Cut & cover side platform station at 28th Street/Little Portugal

Optimized Single Bore Stacked Concept #2

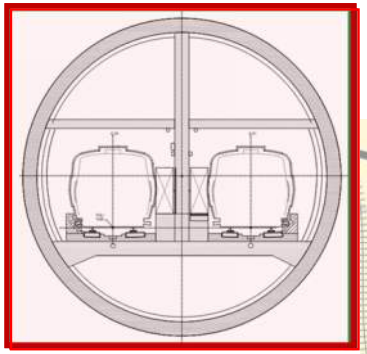

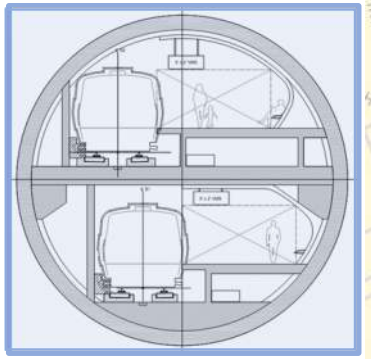

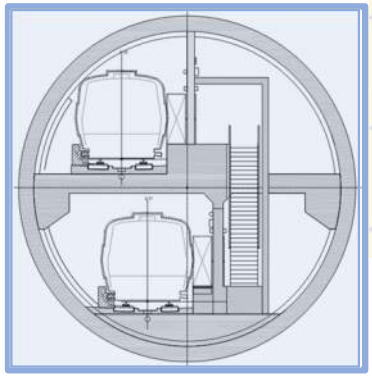

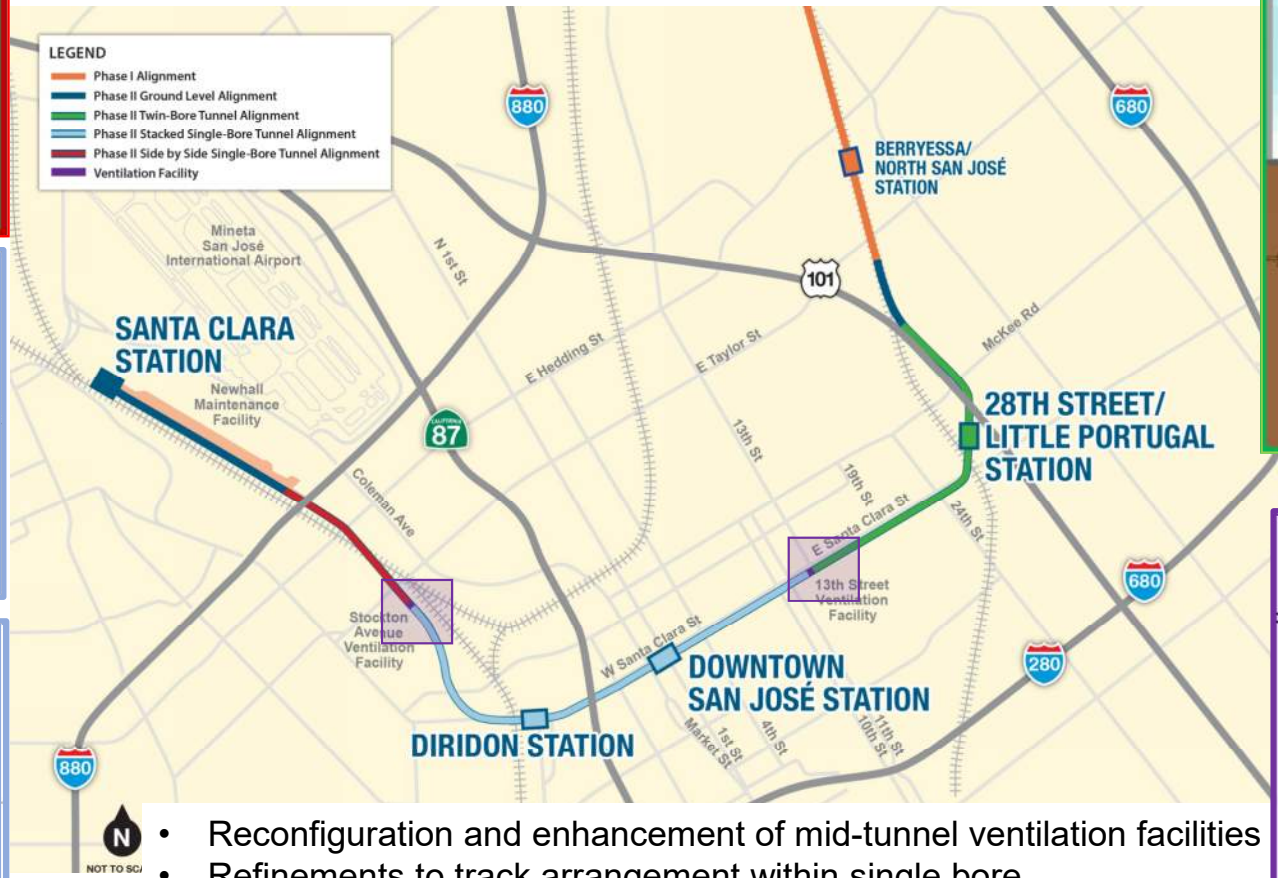

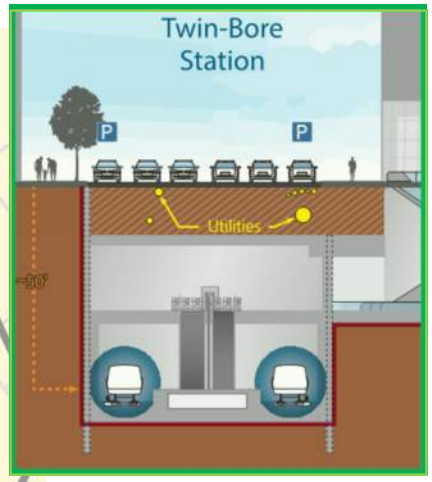

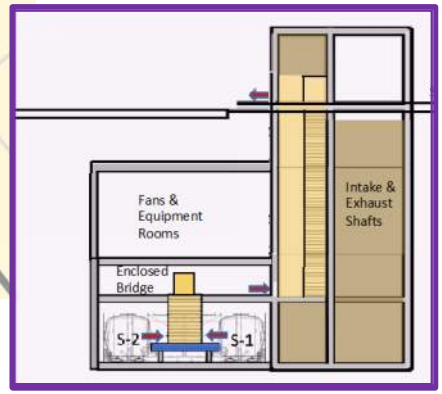

- Reconfiguration and enhancement of mid-tunnel ventilation facilities
- Refinements to track arrangement within single bore
- Twin bore configuration east of 13th Street with cut & cover center platform station at 28th Street/Little Portugal

Next Steps

- Assess potential environmental, right-of-way, utility and other considerations
- Perform engineering analysis incorporating design and operation input from BART
- Develop cost and schedule for both concepts
- Select final concept and advance for Federal funding